Specifications B
Impedance : 50Ω
Frequency Range : 0-6 GHz
Working Voltage : 335 VRMS max.
Dielectric Withstanding Voltage : 1000 VRMS max
VSWR :1.35 max.
Contacts Resistance : Center contact 5.0mΩ
Outer contact 2.5mΩ
Insulator Resistance : 5000MΩ
Temperature Range : -40°C to +155°C

Material
Body : Brass
Body Plated : Gold Flash
Center Contact : Beryllium copper
Center Contact Plated : Gold Flash
Crimp Ferrule : Annealed Brass

Packing:Tape&Reel

# ORDER INFORMATION

6 2 M C X - 5 S F 0 0 8

- 5: 50Ω
- S:Straight
- F:Female

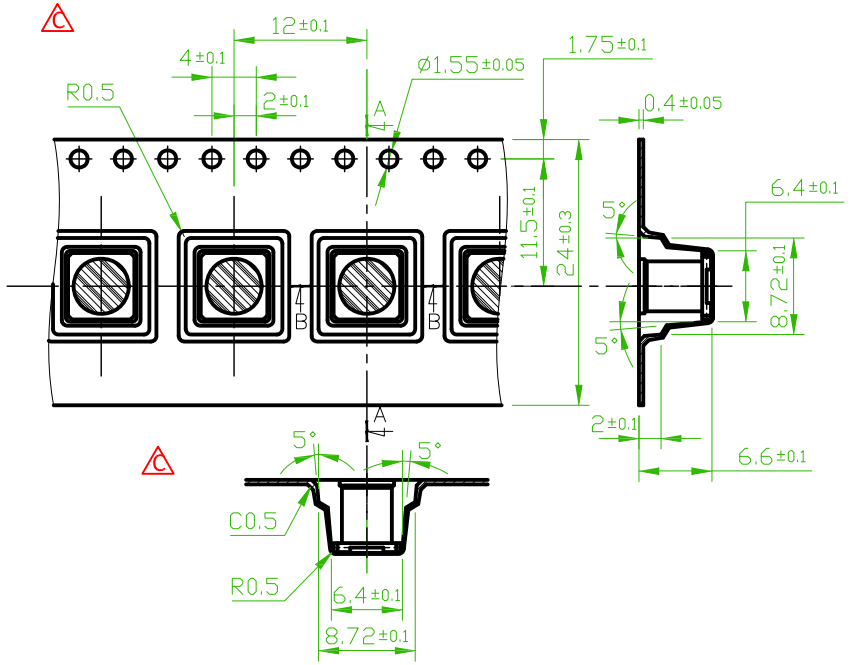


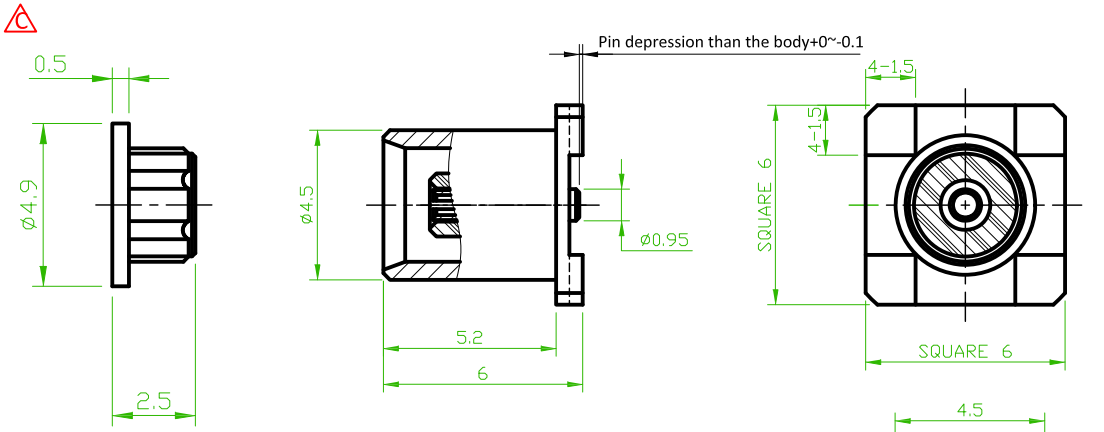


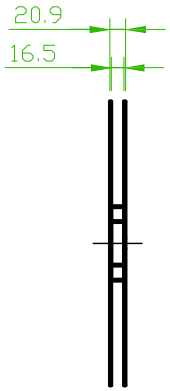


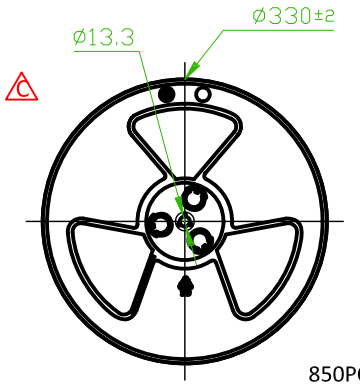


850PCS/REEL

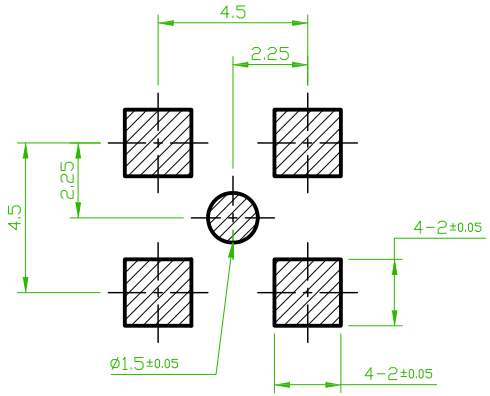


RECOMMENDED
P.C.B LAYOUT

| REV. | ECN NO. OR DESCRIPTION | REVISED | DATE |
|---|---|---|---|
| C | Add Cap Size,Tape&Reel Size | C | 2014/11/19 Roy |
| B | Revise the drawing | B | 2014/11/14 Roy |


AMTEK
糧德精密有限公司
Amtek Technology Co., Ltd.
TEL: 886-2-2260-6878
FAX: 886-2-2260-8030


| | | | | | |
|---|---|---|---|---|---|
| 品名 TITLE | MCX Jack Straight Type For P.C.B Mount | | | 頁數 Page | 1/1 |
| 品號 PART NO. | 62MCX-5SF008 | | | 繪圖 DRAWN | Roy 2014/11/13 |
| 圖號 DRAWING NO. | | 版本 REV. | C | 核對 CHECKED | Derek 2014/11/13 |
| 客戶品號 CUSTOMER P/N | | 比例 SCALE | None | 承認 APPROVED | Joey 2014/11/13 |
| 公差 TOLERANCE | ± 0.1 | 單位 UNIT | mm | THIRD ANGLE PROJECTION | |